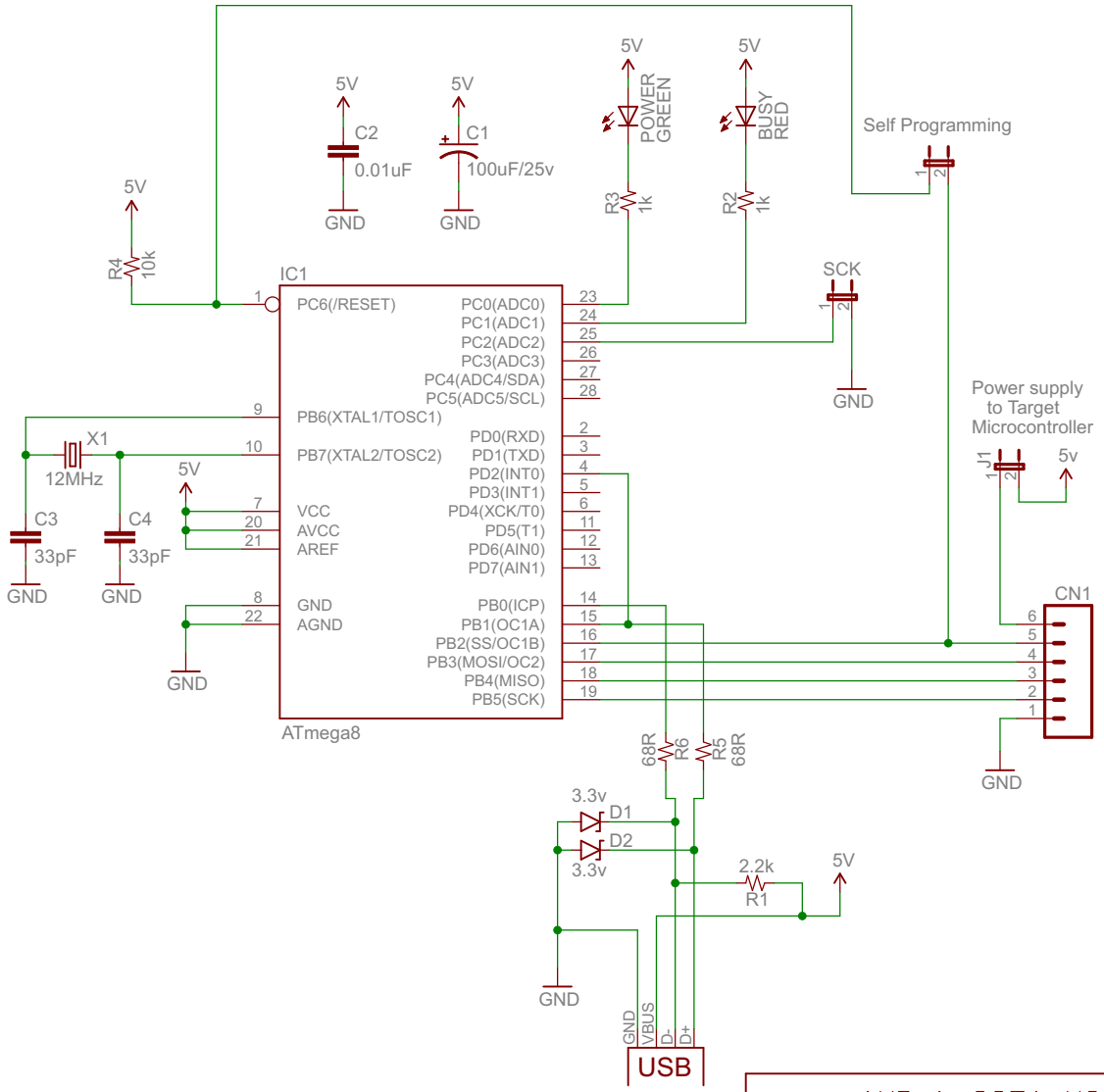

TITLE: AVR & 8051 USB ISP Programmer

Design by:
SILICON TECHNOLABS

REV:
STL011V2.3

Date: 02-01-2016 14:55:40

Sheet: 1/1